DSLR configuration chart

21-10-2010

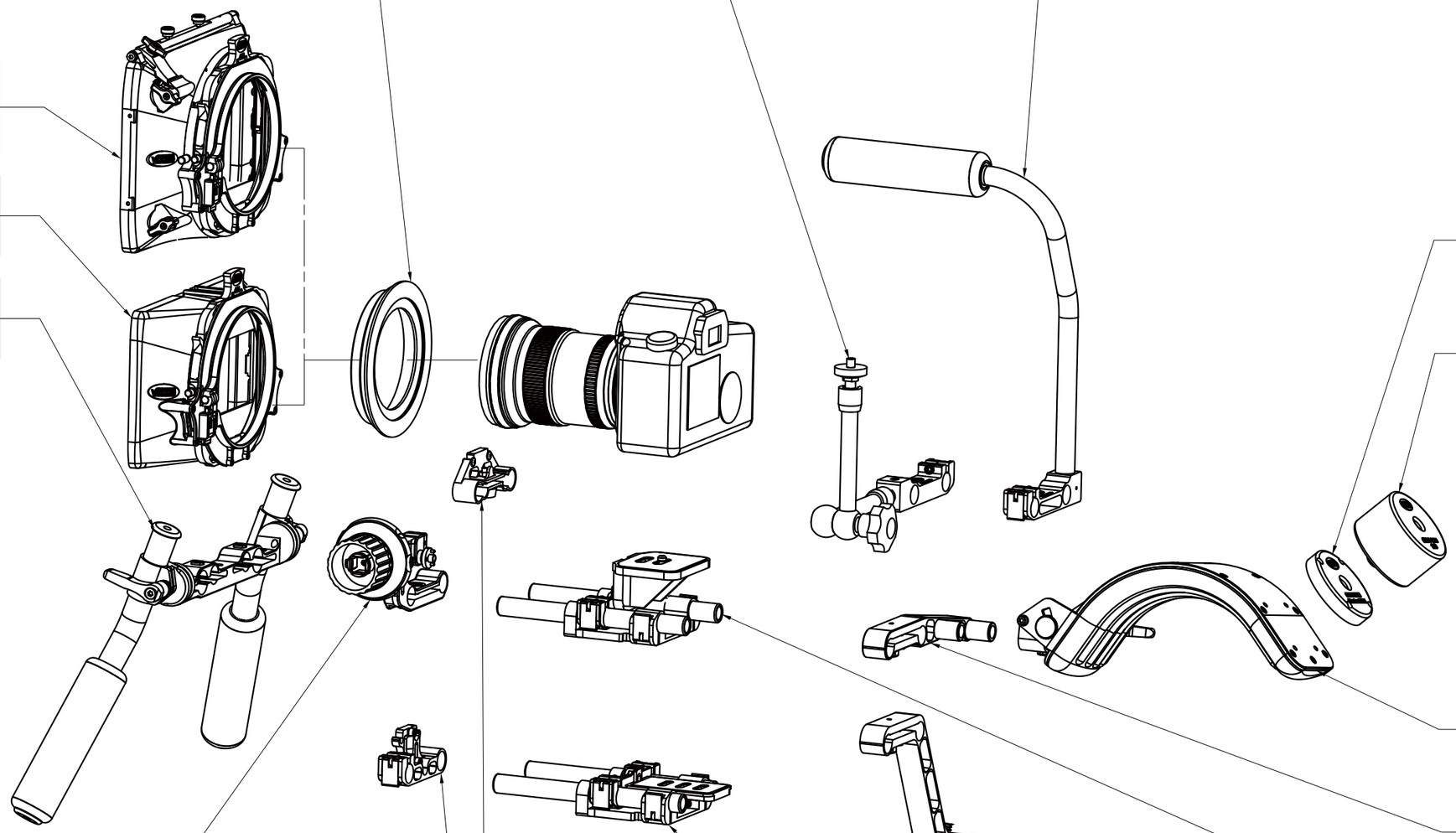

Name: Flexible adapter ring
Item#: 0320-0010

Name: Monitor Support
Item#: 0350-0410

Name: Topside Handgrip
Item#: 0350-0400

Name: MB-250 mattebox
Item#: 0200-0250

Name: MB-210 mattebox
Item#: 0200-0210

Name: Vocas Handgrip kit
Item#: 0390-0002

Name: Weight attachment plate
Item#: 0370-0200

Name: Weight 1KG
Item#: 0370-0210

Name: 15mm Shoulder support
Item#: 0370-0001

Name: Offset bracket Low
Item#: 0350-0021

Name: Rail support DSLR
Item#: 0350-0300

Name: Offset bracket High
Item#: 0350-0025

Name: Follow focus kit with flex gear ring & drive gear
Item#: 0500-2300

Name: Adjustable barsadapter
Item#: 0360-0100

Name: Barsadapter MB2XX
Item#: 0250-0150

Name: Rail support DSLR High
Item#: 0350-0310

Vocas systems B.V.
P.o. box 191, 1200 AD Hilversum, The Netherlands Tel: +31(0)35-6233707 Fax:+31(0)35-6233997
info@vocas.com www.vocas.com